SPACECOM

CB-3

[SPECIFICATIONS]

For R/RDC/RAI Lenses

Power Source : AC 100V to 120V, 220V to 240V (Changeable) 50/60Hz

Power Consumption : MAX. 6W (at AC100V)

Operation

1) Insert the plug and turn the power switch on.

2) Zoom, Focus, and Iris are operated by pushing the button switches. (When using an RDC,RAI Type Lens, the Iris buttons will not work because the Iris is controlled by an internal EE Amp.)

3) At the telephoto position, the image will be larger. Focusing in the telephoto position is more distinct and easier to accomplish.

Operation Temperature : -10 to +50

Size, Weight : 155.2X58X122mm, Approx. 1.2kg

[COMPOSITION]

LENS CONTROLLER CB-3 1
4-Conductor Connector(Male) 1
(Any 4-conductor cable of external dia 6mm to be prepared separately.)

[DIMENSIONS]

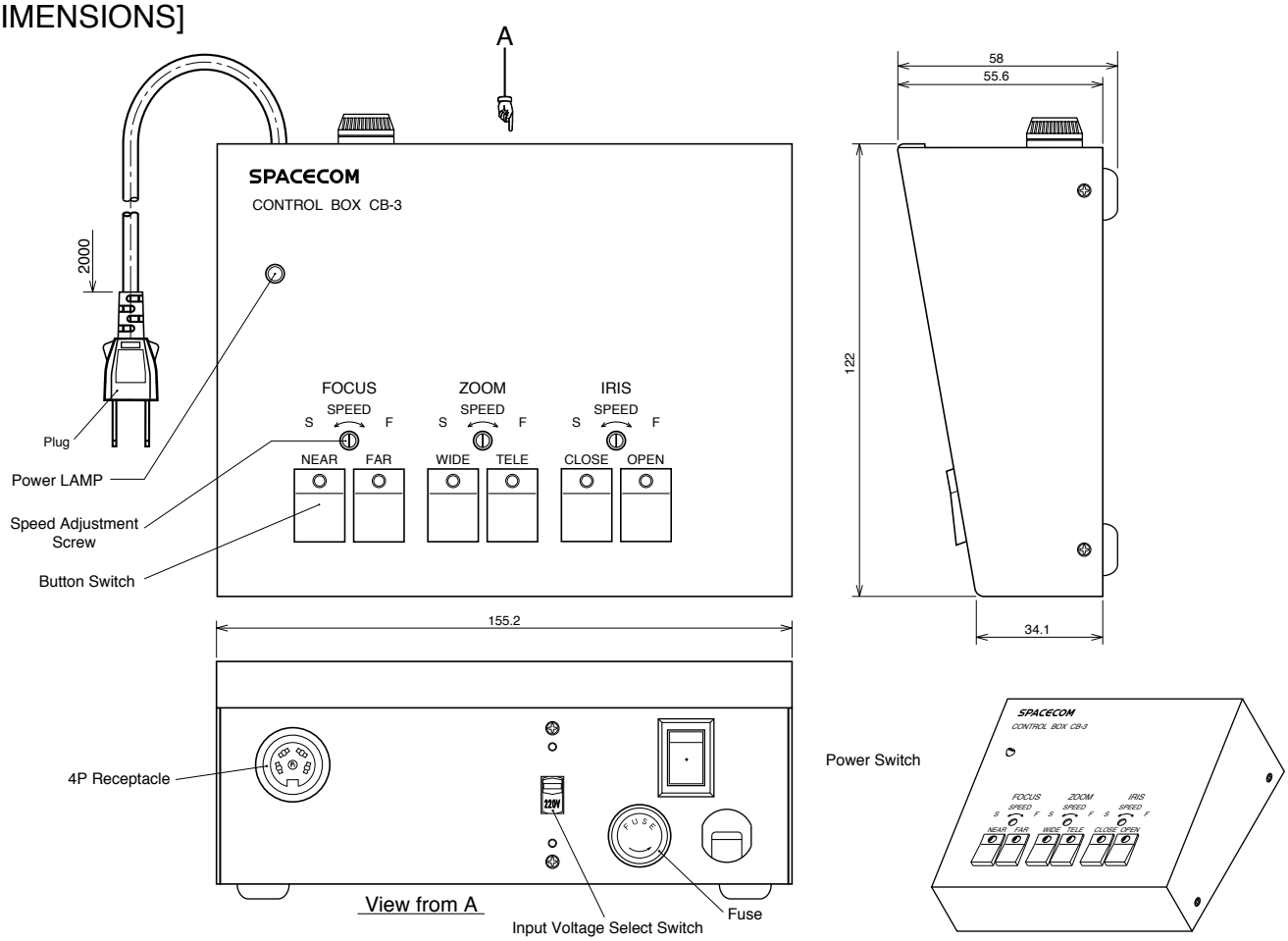

Unit:mm

[CIRCUIT DIAGRAM]

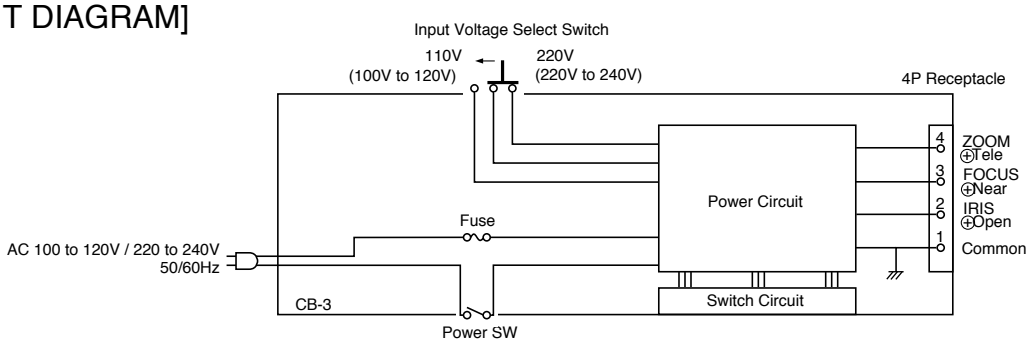

SUBJECT TO CHANGE WITHOUT NOTICE.